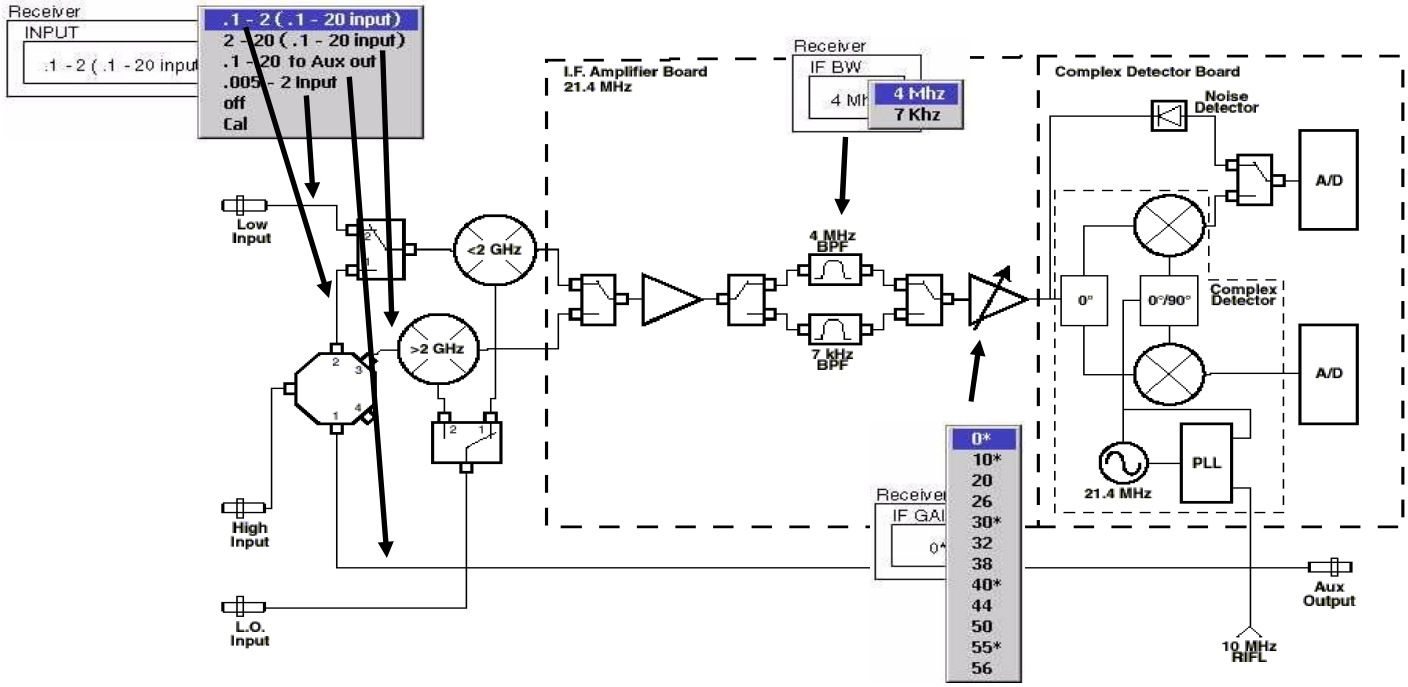
Receiver
INPUT
.1 - 2 (.1 - 20 input)
2 - 20 (.1 - 20 input)
.1 - 20 to Aux out
.005 - 2 Input
off
Cal
Low Input
High Input
L.O. Input
<2 GHz
>2 GHz
I.F. Amplifier Board
21.4 MHz
Receiver
IF BW
4 MHz
7 Khz
4 MHz BPF
7 kHz BPF
Receiver
IF GAI
0*
10*
20
26
30*
32
38
40*
44
50
55*
56
Complex Detector Board
Noise Detector
A/D
0°
0°/90°
Complex Detector
A/D
PLL
21.4 MHz
Aux Output
10 MHz RIFL

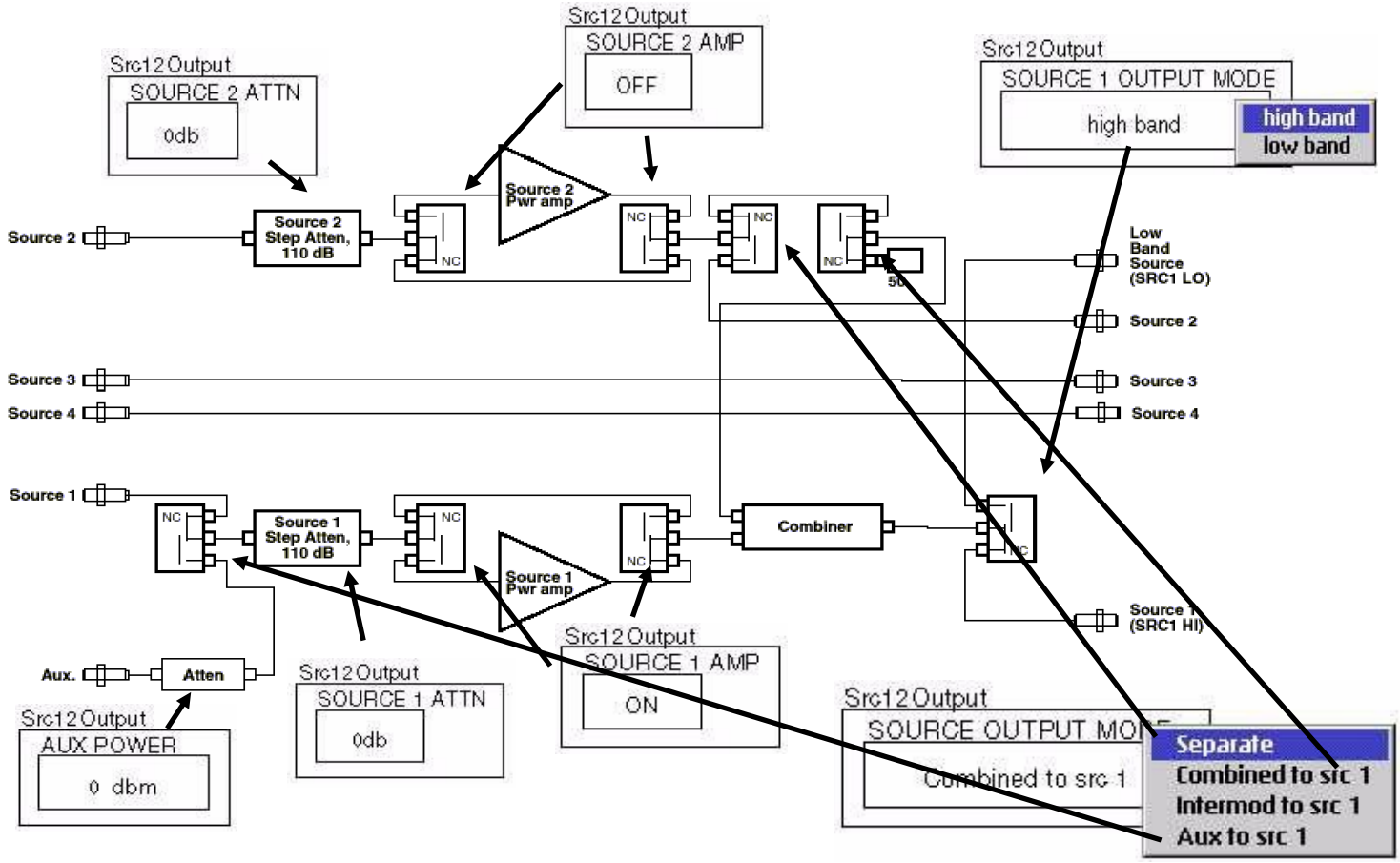
Src12Output
SOURCE 2 ATTN
0db
Src12Output
SOURCE 2 AMP
OFF
Src12Output
SOURCE 1 OUTPUT MODE
high band
high band
low band
Source 2
Source 2 Step Atten, 110 dB
Source 2 Pwr amp
NC
50
Low Band Source (SRC1 LO)
Source 2
Source 3
Source 3
Source 4
Source 4
Source 1
Source 1 Step Atten, 110 dB
Source 1 Pwr amp
Combiner
Source 1 (SRC1 HI)
Aux.
Atten
Src12Output
AUX POWER
0 dbm
Src12Output
SOURCE 1 ATTN
0db
Src12Output
SOURCE 1 AMP
ON
Src12Output
SOURCE OUTPUT MO
Combined to src 1
Separate
Combined to src 1
Intermod to src 1
Aux to src 1

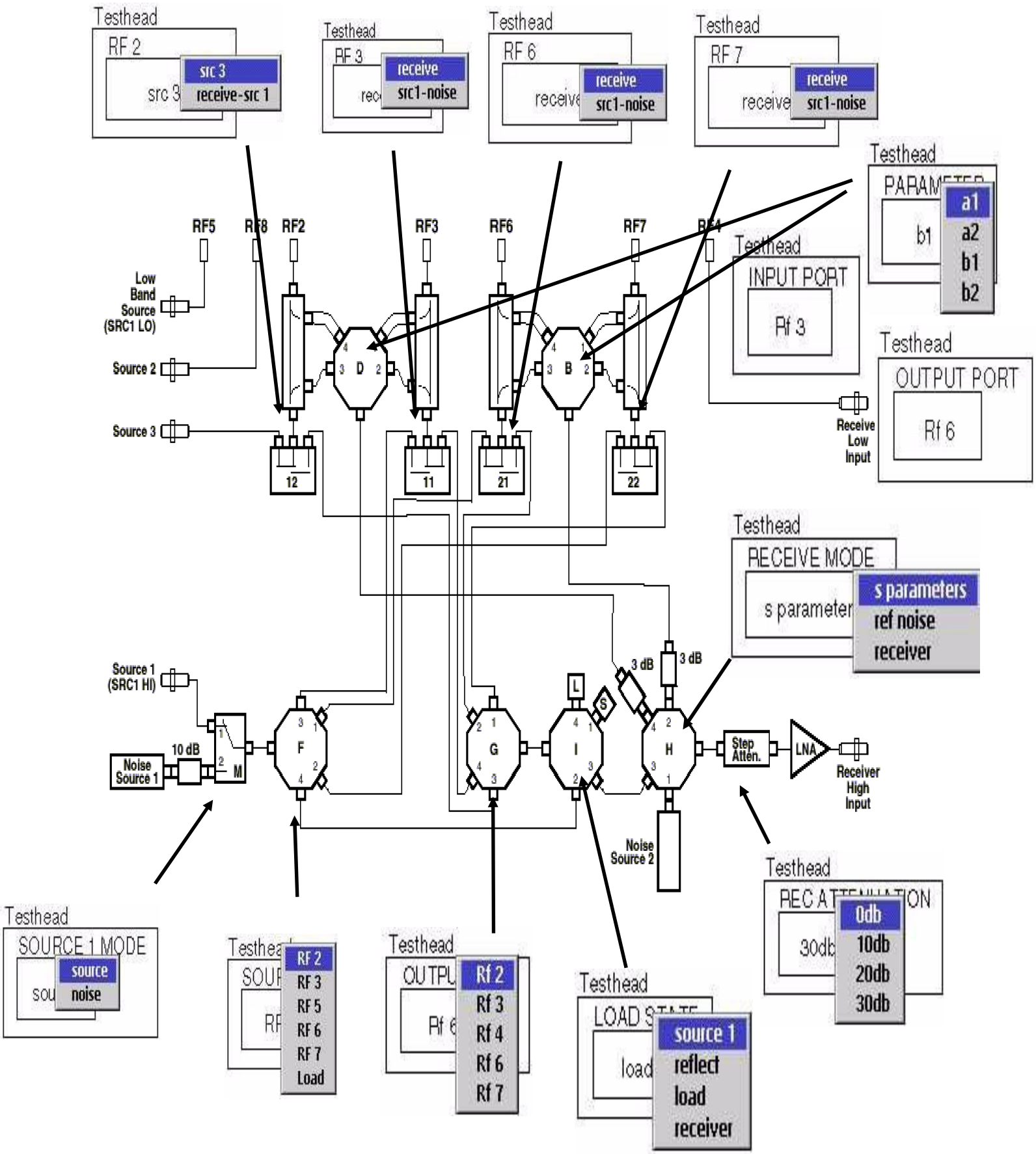
Testhead
RF 2
src 3
src 3
receive-src 1
Testhead
RF 3
receive
src1-noise
Testhead
RF 6
receive
receive
src1-noise
Testhead
RF 7
receive
receive
src1-noise
Testhead
PARAMETER
b1
a1
a2
b1
b2
Testhead
INPUT PORT
Rf 3
Testhead
OUTPUT PORT
Rf 6
RF5
RF8
RF2
RF3
RF6
RF7
RF4
Low Band Source (SRC1 LO)
Source 2
Source 3
D
B
12
11
21
22
Receive Low Input
Testhead
RECEIVE MODE
s parameter
s parameters
ref noise
receiver
Source 1 (SRC1 HI)
10 dB
Noise Source 1
M
F
G
I
H
L
S
3 dB
3 dB
Step Atten.
LNA
Receiver High Input
Noise Source 2
Testhead
REC ATTENUATION
30db
0db
10db
20db
30db
Testhead
SOURCE 1 MODE
source
noise
Testhead
SOUR
RF
RF 2
RF 3
RF 5
RF 6
RF 7
Load
Testhead
OUTPU
Rf 6
Rf 2
Rf 3
Rf 4
Rf 6
Rf 7
Testhead
LOAD STATE
load
source 1
reflect
load
receiver