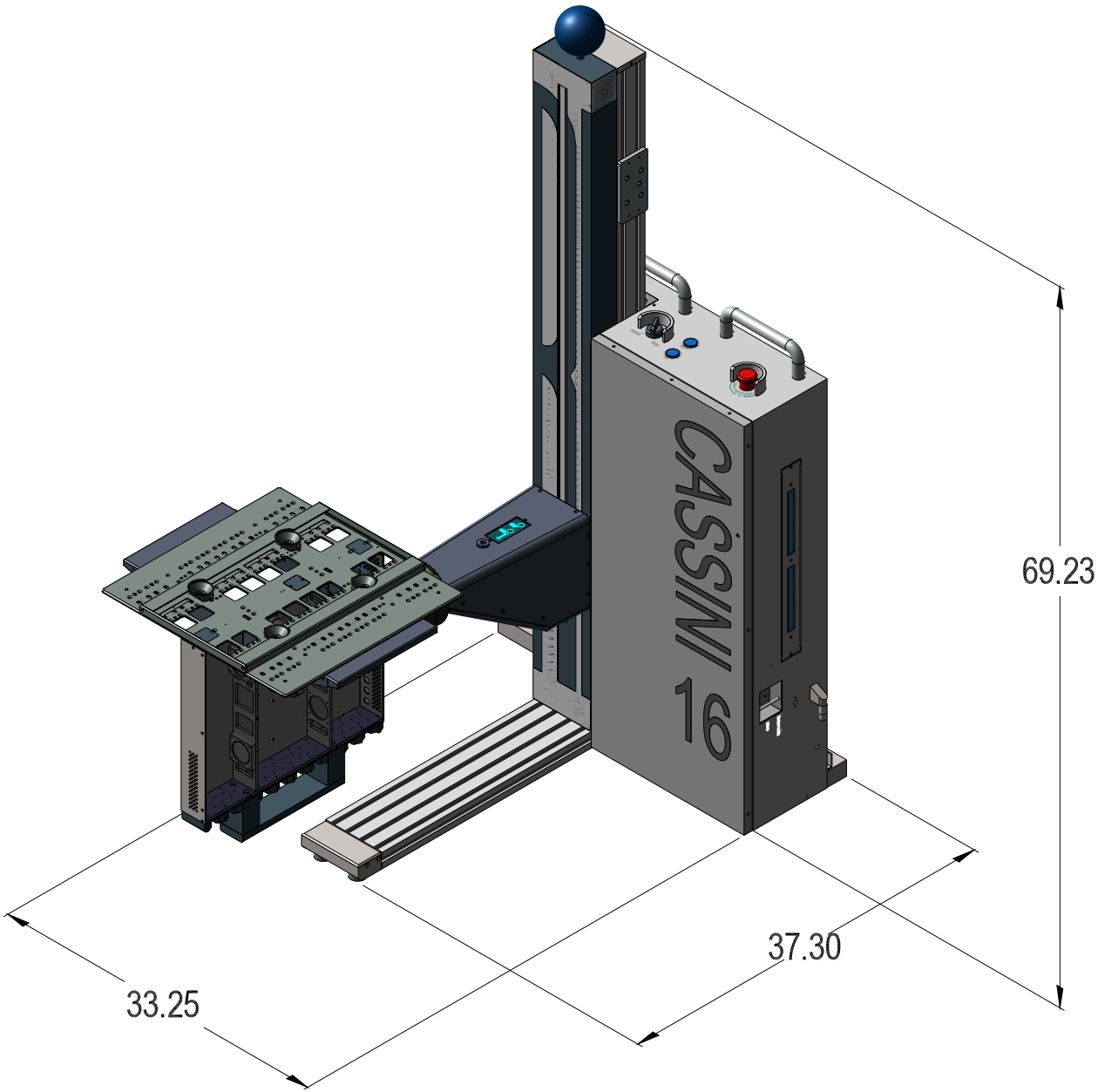
CASSIN 16
69.23
37.30
33.25