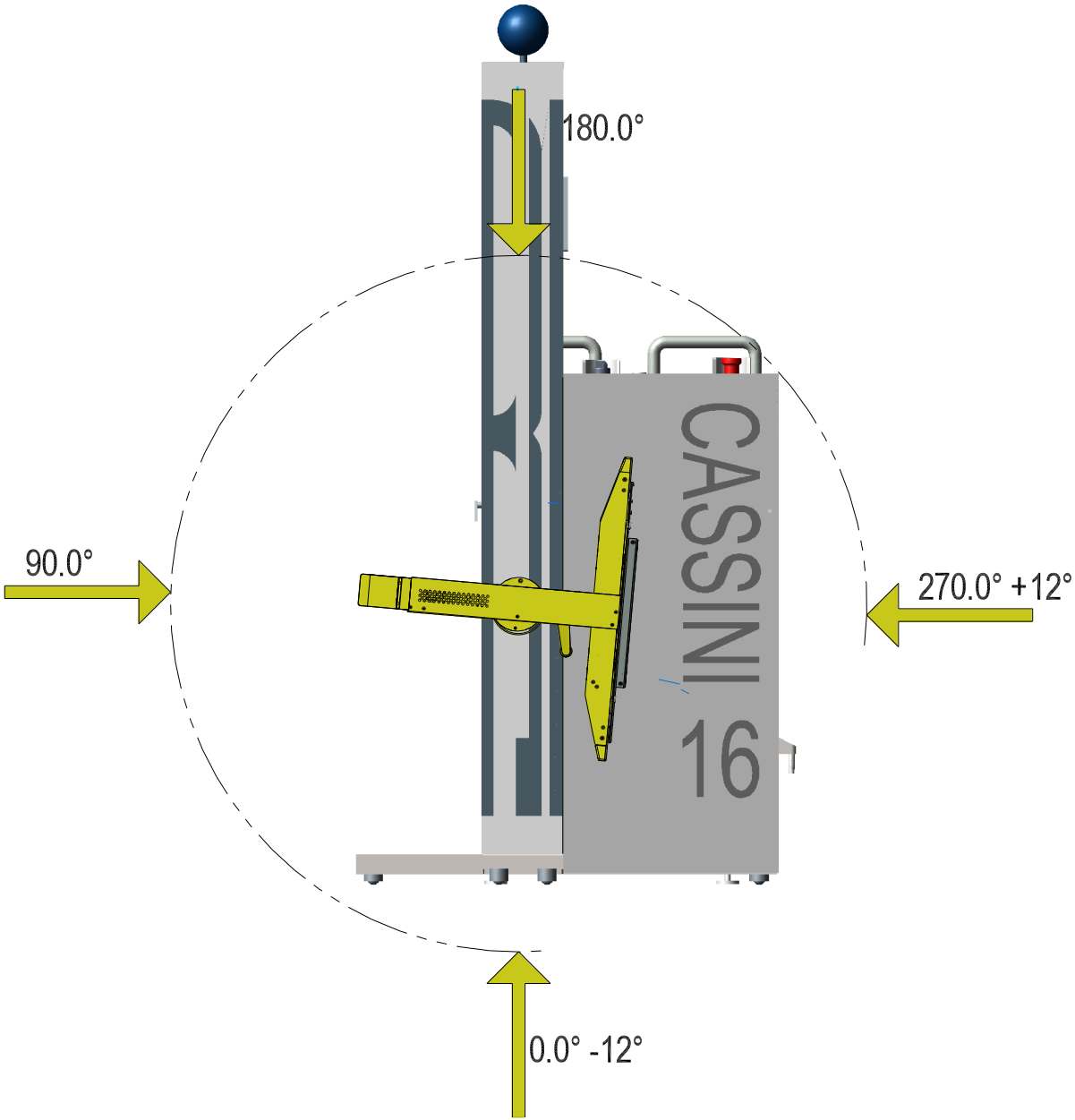
180.0°
90.0°
270.0° +12°
0.0° -12°
CASSINI
16